THIS DRAWING IS UNPUBLISHED. RELEASED FOR PUBLICATION 20
© COPYRIGHT 20 BY - ALL RIGHTS RESERVED.

REVISIONS

P	LTR	DESCRIPTION	DATE	DWN	APVD
	A	INITIAL RELEASE	29MAY2019	JZ	CW
	A1	ECR-19-019346	12DEC2019	BP	CW
	B	ECR-20-013880	16NOV2021	BP	CW

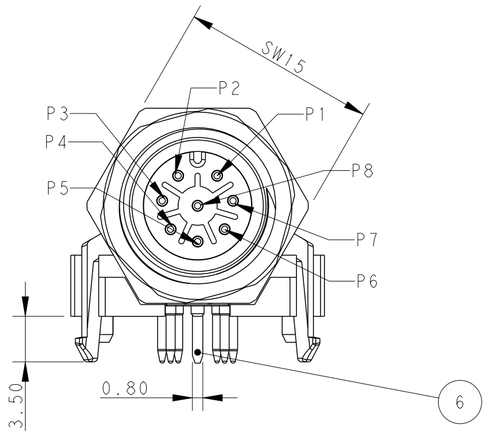

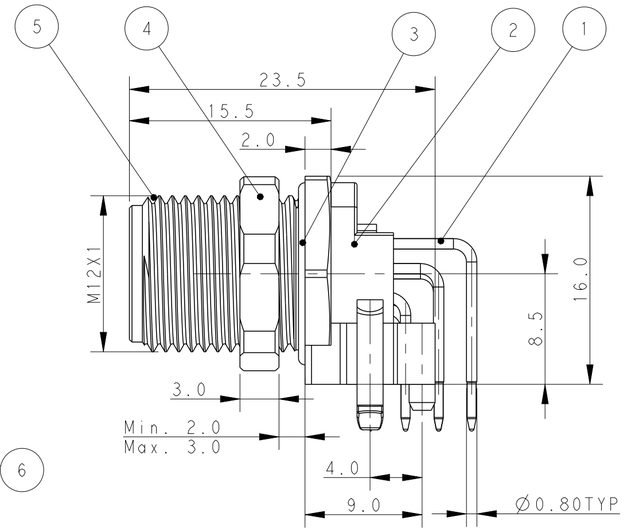

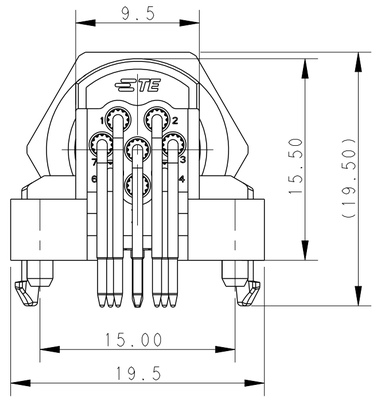

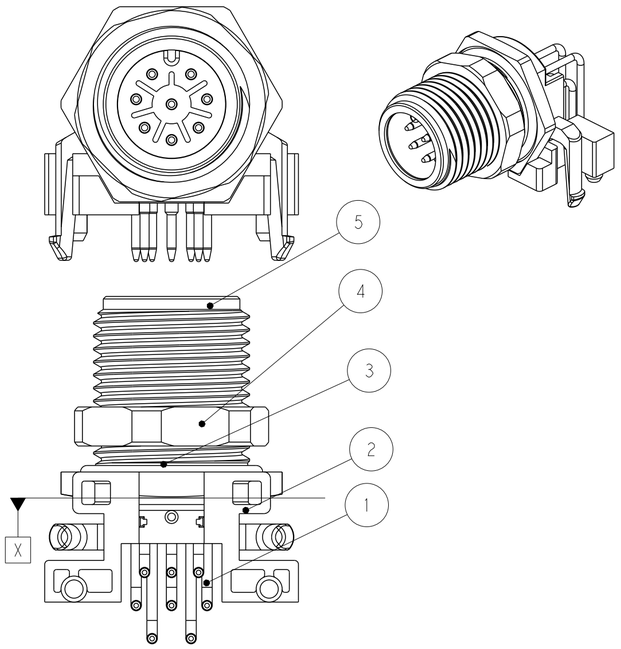

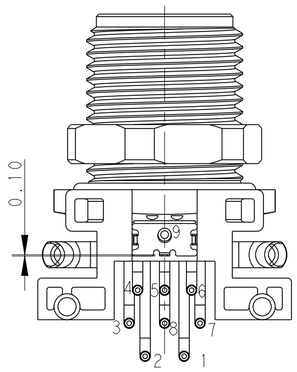

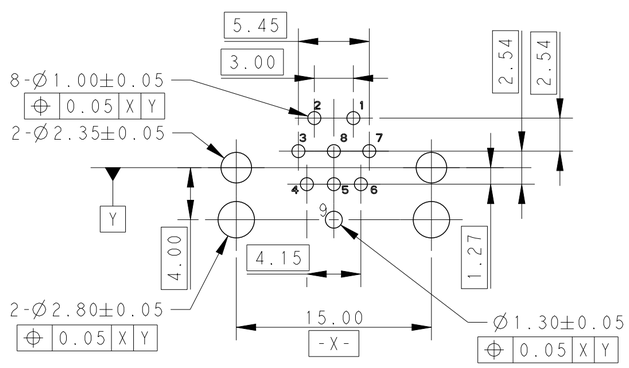

RECOMMEND PCB LAYOUT FOR T4144035081-000(TOP VIEW).

PCB THICKNESS:1.6mm

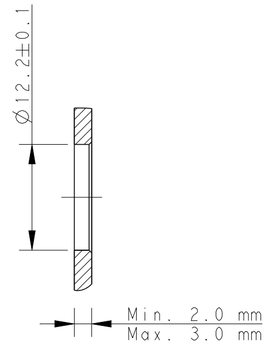

RECOMMENDED PANEL SIZE

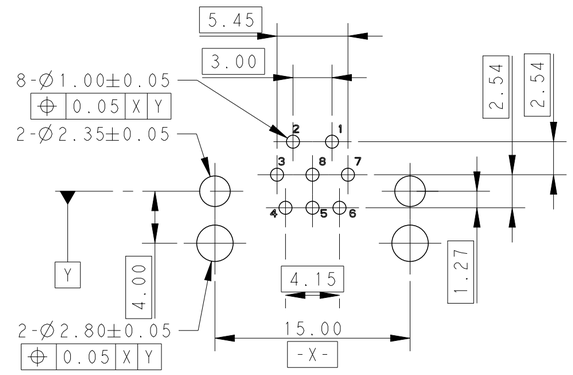

RECOMMEND PCB LAYOUT FOR T4144015081-000(TOP VIEW)

PCB THICKNESS:1.6mm

TABLE 1

PART NUMBER	T4144015081-000	T4144035081-000
PIN ARRANGEMENT	A-CODE	A-CODE
POS	8	8
SHIELD TYPE	UNSHIELDED	SHIELDED
RATED VOLTAGE	30V	30V
TATED IMPULSE VOLTAGE	800V	800V
RATED CURRENT	2A	2A
POLLUTION DEGREE	3	3
OVERVOLTAGE CATEGORY	II	II
MATERIAL GROUP	II	II
CONTACT RESISTANCE	≤10mΩ	≤10mΩ
INSULATION RESISTANCE	>100MΩ	>100MΩ
DEGREE OF PROTECTION	IP67	IP67
OPERATION TEMPERATURE	-40~85°C	-40~85°C

ITEM	DESCRIPTION	MATERIAL	COMMENTS
6	SHIELDING	BRASS	ONLY FOR SHIELDED TYPE
5	NUT	BRASS	NI PLATED
4	COUPLING NUT	BRASS	NI PLATED
3	O-RING	SILICONE	CLEAN
2	HOUSING	PA	BALCK COLOR
1	CONTACT	BRONZE	GOLD FLASH

NOTES:

1. TECHNICAL DATA: SEE TABLE 1
2. RECOMMEND TORQUE 1Nm
3. ALL PRODUCT MUST COMPLIANCE WITH ROHS AND REACH.

THIS DRAWING IS A CONTROLLED DOCUMENT.

DIMENSIONS: mm

TOLERANCES UNLESS OTHERWISE SPECIFIED:
0 PLC ±-
1 PLC ±0.25
2 PLC ±0.15
3 PLC ±
4 PLC ±
ANGLES ±

MATERIAL: SEE TABLE
FINISH: -

DWN 29-Nov-21 JEREMY ZHANG
CHK 29-Nov-21 GINO YAO
APVD 29-Nov-21 CHRIS WANG
PRODUCT SPEC 108-106140
APPLICATION SPEC 114-137144
WEIGHT -

TE Connectivity

NAME: M12 RIGHT ANGLE PCB CONNECTOR ASSEMBLY, MALE, SHIELDED AND UNSHIELDED, A-CODE

SIZE	CAGE CODE	DRAWING NO	RESTRICTED TO
A2	-	C-T41440X5081XXX	-

CUSTOMER DRAWING | SCALE 2:1 | SHEET 1 OF 1 | REV B

1471-9 (3/13)