APPLICABLE COMPONENTS					APPLICABLE WIRE TYPE AND SIZE					
					EAO			NAAO		
ITEM DESCRIPTION	NOMINAL TERMINAL SIZE	FORD COMPONENT PART NUMBER	SIEMENS COMP. PART NUMBER	MATERIAL / SPEC.NO.	WIRE SIZE	LOW TEMP.	HIGH TEMP.	WIRE SIZE	LOW TEMP.	HIGH TEMP.
TERMINAL - FEMALE	0,64	1L2T-14474-DA	V23540-X7000-Y10	COPPER ALLOY/GOLD PLATE	0,22 / 0,35	WSK-ML124-A	S97GG-14401-AA	AWG22	WSB-ML134-A1	WSS-ML135-A1
TERMINAL - FEMALE	0,64	1L2T-14474-BA	V23540-X7000-Y11	COPPER ALLOY/TIN PLATE	0,22 / 0,35	WSK-ML124-A	S97GG-14401-AA	AWG22	WSB-ML134-A1	WSS-ML135-A1
TERMINAL - FEMALE	0,64	1L2T-14474-CA	V23540-X7000-Y20	COPPER ALLOY/GOLD PLATE	0,5 / 0,75	WSK-ML124-A	S97GG-14401-AA	AWG20	WSB-ML134-A1	WSS-ML135-A1
									ESB-ML120-A	ESB-ML123-A/A2
								AWG18	WSB-ML134-A1	WSS-ML135-A1
TERMINAL - FEMALE	0,64	1L2T-14474-AA	V23540-X7000-Y21	COPPER ALLOY/TIN PLATE	0,5 / 0,75	WSK-ML124-A	S97GG-14401-AA	AWG20	WSB-ML134-A1	WSS-ML135-A1
									ESB-ML120-A	ESB-ML123-A/A2
								AWG18	WSB-ML134-A1	WSS-ML135-A1

ITEM	DESCRIPTION	COLOUR	FORD COMP. PART	SIEMENS COMP. PART	MATERIAL (RECYCLING CODE)	WEIGHT	No. OF ITEMS REQUESTED						
1	FEMALE HOUSING CODE A	BLACK	N/A	C23372-A40-C02	LCP GF30	4,66			I				
2	FEMALE HOUSING CODE B	GREEN	N/A	C23372-A40-C03	LCP GF30	4,66		I					
3	FEMALE HOUSING CODE C	NATURAL	N/A	C23372-A40-C04	LCP GF30	4,66	I						
4	FEMALE SPACER	RED	N/A	C23372-A49-C73	LCP GF30	1,13	I	I	I				
5	CPA	RED	N/A	C23372-A49-C74	PBT GF20 (A2)	0,4	I	I	I				

FORD PART	SIEMENS PART	MAX TEMP.	FORD PART	SIEMENS PART
			MATING COMPONENT	
1S7T-14489-SA	V23542-G2622-D101	14,5°C	1S7T-14A459-SA	V23542-G2422-D101
1S7T-14489-TA	V23542-G2622-D102	14,5°C	1S7T-14A459-TA	V23542-G2422-D102
1S7T-14489-VA	V23542-G2622-D103	14,5°C	1S7T-14A459-VA	V23542-G2422-D103

NOTES:
1. PART MUST CONFORM TO THE ELECTRICAL CONNECTION SYSTEM DESIGN SPECIFICATION (SDS) REV.14, dated 971209
2. PART MUST CONFORM ES-F8DB-14A464-AA (USCAR) dated 951011
3. MAXIMUM INSERTION FORCE FULLY POPULATED WITH TIN TERMINALS IS LESS THAN OR EQUAL TO 90N
4. ALL PLASTIC PARTS MUST HAVE MATERIAL IDENTIFICATION SYMBOLS CLEARLY MARKED, WHEREVER PACKAGE SIZE PERMITS
5. ENGINEERING APPROVAL REQUIRED FOR ALL SOURCING AND TOOLING OF THIS PART
6. FOR ENGINEERING APPROVED SOURCE SEE ENGINEERING RELEASE
7. ENGINEERING APPROVAL OF SAMPLE FROM EACH SUPPLIER IS REQUIRED PRIOR TO AUTHORIZATION OF PART PRODUCTION
8. CHANGES IN DESIGN COMPOSITION OR PROCESSING FROM THE PART PREVIOUSLY APPROVED FOR PART PRODUCTION REQUIRES PRIOR ENGINEERING APPROVAL
9. GENERAL TOLERANCES: ±0.3 ALL ONE PLACE DIMENSIONS, ±0.10 ALL TWO PLACE DIMENSIONS, ±3°00' ALL ANGULAR DIMENSIONS
10. PART MUST MATE WITH TBD
11. 0.2mm MAXIMUM RADIUS PERMISSIBLE ON EDGES AND FILLETS SHOWN AS SHARP FOR PLASTIC PARTS
12. [X.XX] DENOTES BASIC DIMENSIONS. BASIC DIMENSIONS HAVE ZERO TOLERANCES AND DESCRIBE THE EXACT THEORETICAL LOCATION (TRUE POSITION) OR CONTOUR
13. ⊕ DENOTES TOLERANCE ZONE IN A RELATION TO A FEATURE
14. [G] DENOTES GAGE DESIGN. GAGE DESIGNS MUST HAVE SIGNED ENGINEERING APPROVAL PRIOR TO CONSTRUCTION AND WILL BE A CONDITION OF FINAL PART APPROVAL
15. PARTS ARE TO BE FREE OF SCRATCHES, DISCOLORATION, SALT RESIDUE OR OTHER IMPERFECTIONS THAT MAY AFFECT FUNCTION OR FIT OF PART
16. SOURCE IDENTIFICATION MARK, PRODUCTION DATE CODE & ASSEMBLY PART NO. MUST BE PERMANENTLY APPLIED ON THE PART
17. THE MASTER SOURCE OF INFORMATION FOR THIS DRAWING IS IN A PE COMPUTER DATABASE. CHANGES ARE NOT PERMITTED WITHOUT PRIOR CONSENT OF THE RELEVANT ENGINEERING CAD ACTIVITY

LTRS	REVISIONS		
ORIGINATOR	CHECKER	ENGR APP	MATL APP
Released EE00 I 10959705 000		DATE: 990407	CAD:Y
B.HULPIAU	DSCHIMAN	FSENYUE2	SIEMENS EC
(A1) DISASSEMBLY GRIP			
(A2) PBT-GF20 WAS PBT-GF15			
(A3) NEW CAVITY REV.03 IMPLEMENTED			
		DATE: 990914	CAD:Y
V.CAUWENB.	DSCHIMAN	FSENYUE2	SIEMENS EC

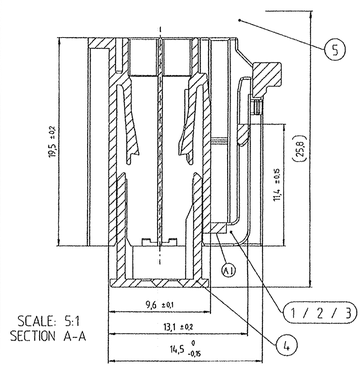

SCALE: 5:1
SECTION A-A

DELIVERY CONDITION:
SPACER IN PREINSTALLED POSITION
CPA IN PREINSTALLED POSITION

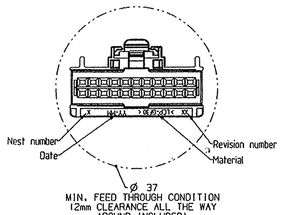

MIN. FEED THROUGH CONDITION
(2mm CLEARANCE ALL THE WAY AROUND INCLUDED)
KEYING OPTION 1

	CODE A COLOUR: BLACK	CODE B COLOUR: GREEN	CODE C COLOUR: NATURAL
SIEMENS PART	V23542-G2622-D101	V23542-G2622-D102	V23542-G2622-D103
FORD PART	1S7T-14489-SA	1S7T-14489-TA	1S7T-14489-VA
	12,8 ±0,1 / 14,3 ±0,1	14,3 ±0,1 / 12,8 ±0,1	12,8 ±0,1 / 12,8 ±0,1
SIEMENS PART	V23542-G2422-D101	V23542-G2422-D102	V23542-G2422-D103
FORD PART	1S7T-14A459-SA	1S7T-14A459-TA	1S7T-14A459-VA
	MATING COMPONENT		

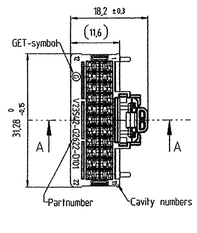

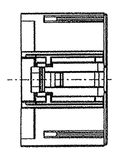

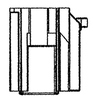

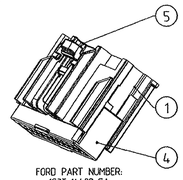

FORD PART NUMBER:
1S7T-14489-SA
CODE A

APPLICABLE HEADER SPECIFICATION

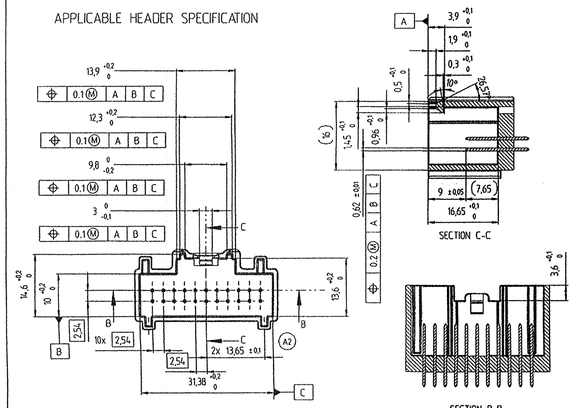

SECTION C-C

SECTION B-B

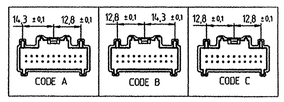

0.64 GET
TERMINAL 13)

Material
CuMg0.1
Tensile strength >600 N/mm2
Electrical conductance > 30 Sm/mm2
(>50 % IACS)

1) BOTH SIDES
2) 4x
3) CONTACT AREA
CONTACT SURFACE, ACCORDING TABLE; WITHOUT SCRATCHES ETC. POROSITY ACCORDING SPECIFICATION F49-F6250
ROUGHNESS Ra<3 µm
4) STAMPING AREA,
STAMPING ON BOTH SIDES, 0.01 mm MN.
5) NOT SHARP, BURR FREE;
PIN TIP IS NOT SYMMETRICAL
6) NOBLE METAL FLASH ALLOWABLE
7) AT PIN TIP
8) AT PIN BASE
9) LETTERING DIN1451 - H1.5 0.2 SUNK RAISED
10) INTERFACE NAME CHARACTERSIZE 3mm
11) PINS ONLY SHOWN IN INTERFACE A
12) ALL UNDIMENSIONED WALLTHICKNESSES 1 ± 0.2 mm
ALL UNDIMENSIONED RADII R 0.2 ± 0.1 mm
ALL UNDIMENSIONED TAPERS 0.3 x 45°
13) G=GLOBAL E=ELECTRONIC T=TECHNOLOGY
14) RECOMMENDED INTERFACE MATERIAL: PBT GF15

GENERAL TOLERANCES
0.0 = ± 0.10 mm
0.00 = ± 0.05 mm
0° = ± 2°
0.0° = ± 1°

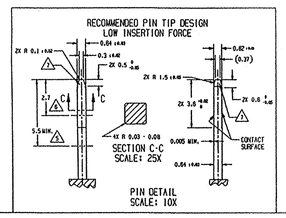

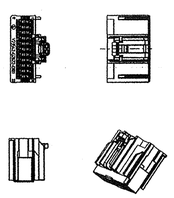

FULL SIZE VIEWS
SCALE: 1:1

THIS DRAWING HAS BEEN PREPARED BY OR ON BEHALF OF FORD MOTOR COMPANY. FORD RETAINS ALL COMMON LAW, STATUTORY AND OTHER RESERVED RIGHTS, INCLUDING COPYRIGHTS. THIS DRAWING SHALL NOT BE USED FOR ANY PURPOSE OTHER THAN PERFORMING SERVICES DIRECTLY OR INDIRECTLY TO FORD, WITHOUT THE EXPRESSED WRITTEN PERMISSION OF FORD. UNAUTHORIZED USE, COPYING OR MODIFICATION, INCLUDING THE REMOVAL OF THIS NOTE, MAY CONSTITUTE A VIOLATION OF CIVIL OR CRIMINAL LAWS ENFORCEABLE BY FORD OR GOVERNMENTAL AGENCIES.

COPYRIGHT © FORD MOTOR COMPANY
(YEAR AS INITIAL RELEASE)

1S7T-14489-TA
1S7T-14489-VA

SIEMENS / OSRAM SYLVANIA	SIEMENS DRAWING NR. V23542-G2622-D101...D103-05-7427		
REFERENCE	MP-1S7I-1B0102-D11		
PART MUST COMPLY WITH MATERIAL SPECIFICATION WSS-M99P9999-A1 TO HELP SAFEGUARD HEALTH, SAFETY AND THE ENVIRONMENT.			
DRAFTED IN ACCORDANCE WITH FAO ENGINEERING DRAFTING STANDARD CURRENT AT INITIAL RELEASE	3RD ANGLE PROJ DIMENSIONS IN MILLIMETERS		
CAD TYPE S-IDEAS	CAD LOC. METAPH	CAD FILE 1S7T-14489-S ; VER 6	IS MASTER
OPER. NO.	UNIT	DRAWING 1S7T-14489-SA	
DESIGN	DETAIL	TITLE SLV ASY-WIRE CONNECTOR - FEMALE	SHT 1 OF 1
CHECKED	SAFETY		
SCALE 2:1	DATE 980320	DIVISION / PLANT	Ford Original

DRW SIZE A1/D

NOTE :
1. DIMENSIONING AND TOLERANCING PER ASME Y14.5M-1994, WITH EXCEPTIONS AS DESCRIBED IN DRAWING STANDARDS.

Weitergabe sowie Vervielfältigung dieser Unterlage, Verwertung und Mitteilung ihres Inhalts nicht gestattet, soweit nicht ausdrücklich zugestanden. Zuwiderhandlungen verpflichten zu Schadenersatz. Alle Rechte vorbehalten, insbesondere für den Fall der Patenterteilung oder GM-Eintragung.
The reproduction, transmission or use of this document or its contents is not permitted without express written authority. Offenders will be liable for damages. All rights, including rights created by patent grant or registration of an utility model or design, reserved.

PR	Rev	Description	Date	Name
	6	ECO-11-005027	06APR11	HAHI

Dimensions in mm
3rd angle projection

TOLERANCES
.X ±
.XX ±
.XXX ±
Angles ±

Date 26.11.98
Drawn DE KEIRSEL
Check

TE Connectivity

Scale 2:1 | Format DIN A1

SLV ASY-WIRE
CONNECTOR-FEMALE

V23542-G2622-D101...D103-=-7427

Sheet 1 / 1 Sh.