© 2020 TE Connectivity. All Rights Reserved.

PART NUMBER	REV	DESCRIPTION
2234130-1	A	HV DIE SET
7-2234130-7	A	CRIMP TOOLING KIT
9-2234130-1	A	DIE SET WITH DIE HOLDER

REVISIONS

P	LTR	DESCRIPTION	DATE	DWN	APVD
	A1	ECR-19-008534	31MAY2019	LG	TE
	A2	REVISED PER ECR-20-008679	04SEP2020	GK	TE
	A3	ECR-20-011987	04SEP2020	AJ	YY
	A4	ADDED -91 ECN-21-115513	31AUG2021	KH	YY

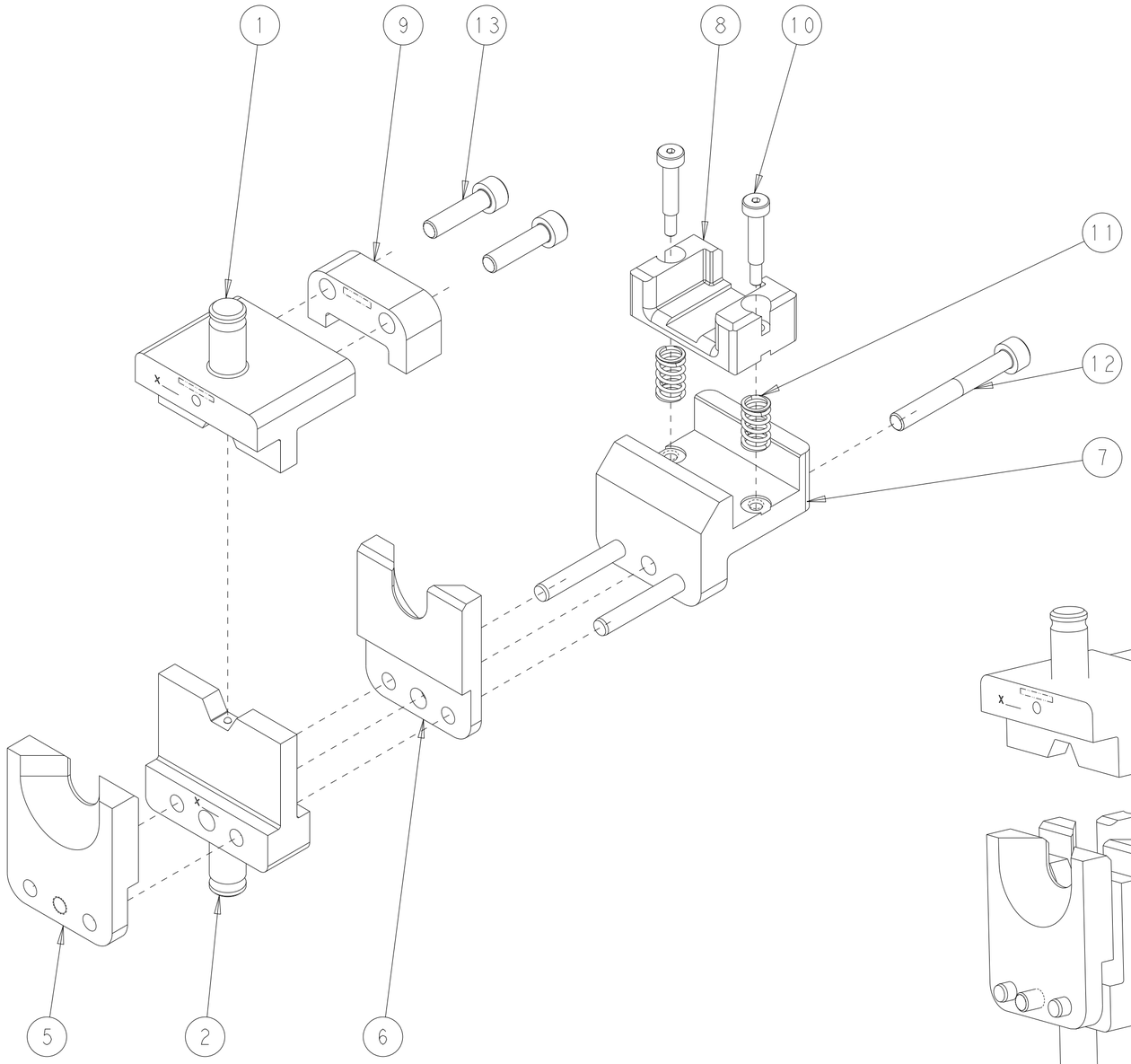

FERRULE NAME	OUTER FERRULE HVA280 MULTI-CORE	
FERRULE PART NUMBER	1587724-2/1587723-2/1-2103157-2	
SPECIFICATION	114-13305	114-32056
REFERENCE DRAWING	C-2103437	C-2103309
USED ON	2305470-1	
INSTRUCTION SHEET	408-35071	

CABLE SUPPLIER/ SPECIFICATION	CABLE SIZE	CRIMP HEIGHT	CRIMP HEIGHT REFERENCE SETTING
COROPLAST 9-2641	2X2.5mm^2	10.80±0.1	A5
DRAKA FLR91XBC33X	2X4.0mm^2		
COROPLAST 9-2641	3X2.5mm^2		

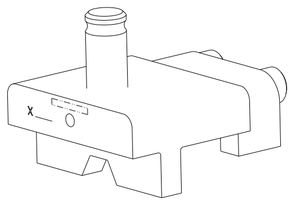

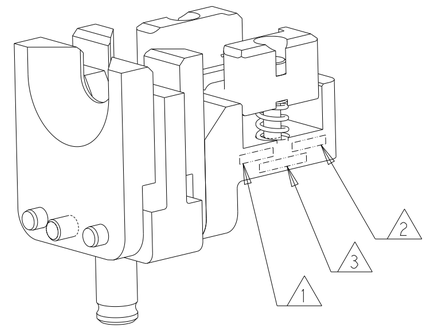

-91	-77	-1	PART NO	DESCRIPTION	ITEM NO
1	-	-	2305470-1	HV DIE HOLDER WITH FINE ADJUST	100
2	-	2	2-18023-1	SCR, SKT HD CAP M5 X 20.0	13
1	-	1	2-18023-4	SCR, SKT HD CAP M5 X 40.0	12
2	-	2	3-22281-6	SPRING, COMPRESSION	11
2	-	2	2-993127-2	SCR, SKT HD SHLDR 4.0 DIA X 16.0	10
1	-	1	2234129-1	TERMINAL HOLD DOWN	9
1	-	1	2234128-1	BLOCK, TERMINAL	8
1	-	1	2326504-2	HOUSING, LOCATOR	7
1	-	1	2234127-1	REAR LOCATOR, FERRULE	6
1	-	1	2234127-2	REAR LOCATOR, FERRULE	5
1	1	1	2326501-4	LOWER DIE, FERRULE	2
1	1	1	2326502-4	UPPER DIE, FERRULE	1

1. APPLY "DIE SET PN" PER TEC-115-67-2 IN APPROXIMATE AREA SHOWN.
2. IDENTIFY PART NUMBER AND REVISION LETTER PER TEC-115-67-2 IN APPROXIMATE AREA SHOWN.
3. IDENTIFY SERIAL NUMBER PER TEC-115-67-2 IN APPROXIMATE AREA SHOWN.
4. TORQUE RECOMMENDATIONS PER 101-35000 UNLESS OTHERWISE SPECIFIED.

THIS DRAWING IS A CONTROLLED DOCUMENT.

DIMENSIONS: MM

TOLERANCES UNLESS OTHERWISE SPECIFIED:
0 PLC ±-
1 PLC ±-
2 PLC ±-
3 PLC ±-
4 PLC ±-
ANGLES ±-

MATERIAL - -
FINISH - -

DWN K.HUANG 30JAN2019
CHK C. KERSTETTER 30JAN2019
APVD K.HUANG 30JAN2019
PRODUCT SPEC -
APPLICATION SPEC -
WEIGHT -

TE Connectivity

NAME DIE ASSEMBLY, HVA280 2.5mm2/4mm2 FERRULE -

SIZE A2 | CAGE CODE 00779 | DRAWING NO C-2234130 | RESTRICTED TO -

Customer Accessible Production Drawing | SCALE 1:1 | SHEET 1 OF 1 | REV A4