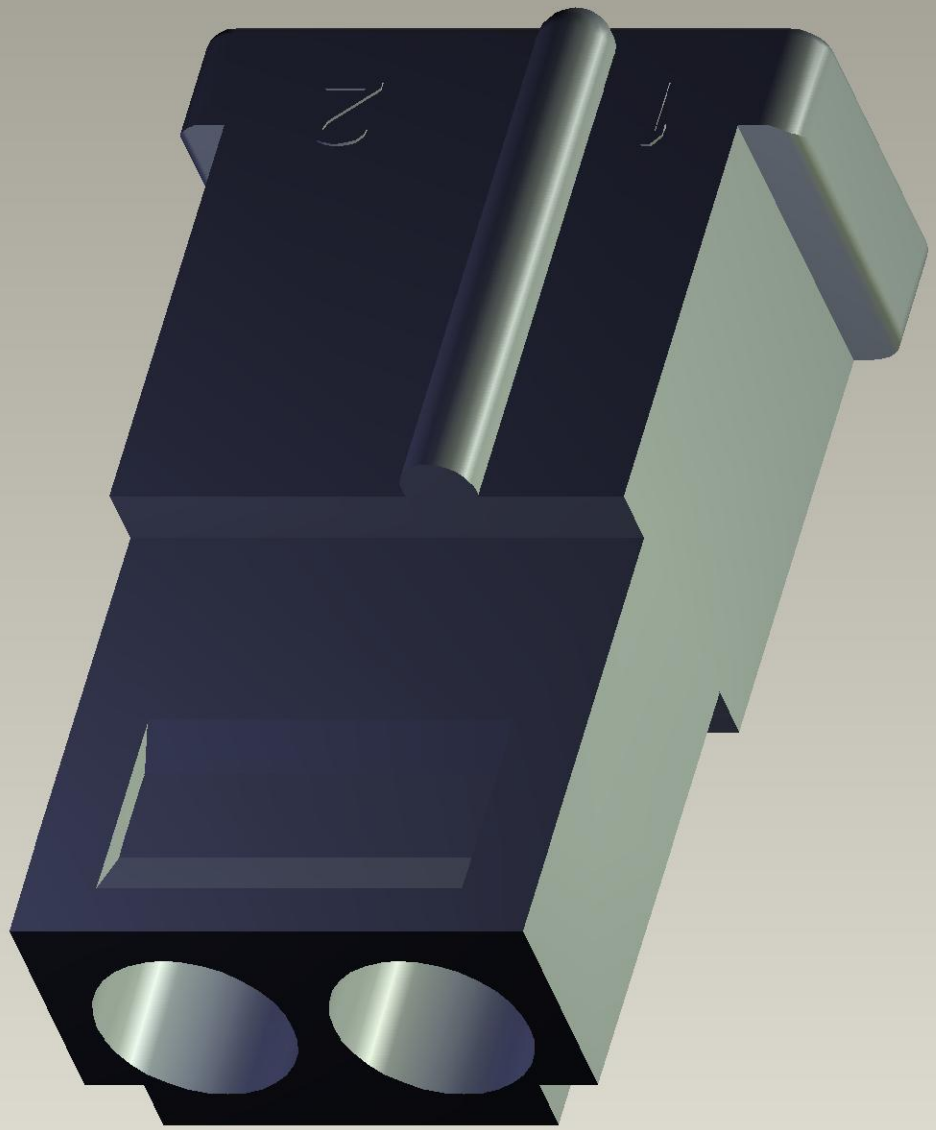

Instance:C-1-480318-0