© 2024 TE Connectivity. All Rights Reserved.

| REVISIONS | | | | | |
|---|---|---|---|---|---|
| P | LTR | DESCRIPTION | DATE | DWN | APVD |
| | A | ECN-24-270048 TE STANDARD | 14 JUN 2024 | KS | RB |

| EC No. |
|---|
| |
| |
| |
| |

# Battery Disconnector 400A

Page 1 of 1

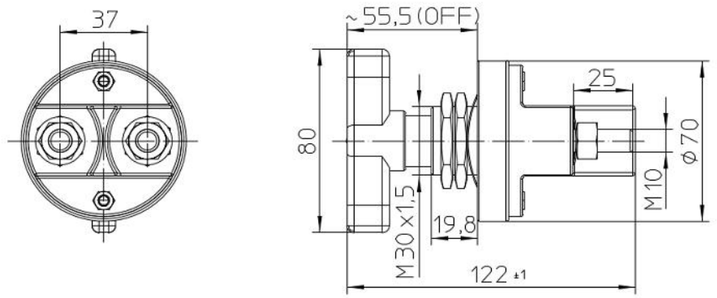


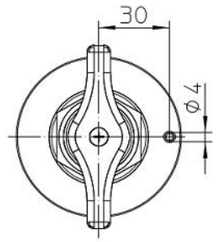


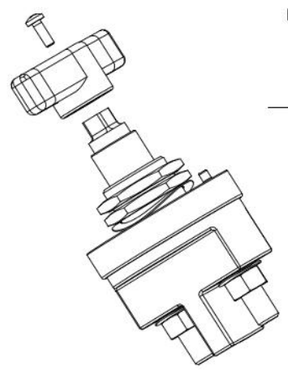

Circuit



Technical Data:

Case Material.....PA GF black
Switch Lever Material.....PA GF red
Min.Insulation Resistance.....100MOhm
Dielectric Withstanding Voltage.....1050V-1min
Max.Contact Drop during Resistive Load.....150mV
Voltage.....to 32VDC
Duty Rating.....400A
Overload.....1200A-4min
.....1600A-1.5min
.....2000A-10sec
Sealing.....IP 67 / IEC 529
Vibration.....4G / 50-2000Hz
Shock G-Level.....6G / 11ms
Weight.....360g / 0.8 Pound
Temperature Range.....-40°C to +85°C
Wire Section (At Nominal Load).....min. 240 mm2
Switch Lever.....not removeable
Torque (Main Terminals).....15-20 Nm

| | Date | Name |
|---|---|---|
| Drawn | 19.08.2004 | Mielk |
| Check | 20.05.2005 | Mielk |

mm — General Tolerances

Scale 1:2

Elektrotechnik - GmbH & Co KG
D - 72218 Wildberg

Drawing No: 35-413-141-R

NSN:

NOTE
Bemerkungen:

1 TE-CONNECTIVITY ORDER-NUMBER
TE-connectivity Bestellnummer

2 DO NOT SWITCH UNDER LOAD!
Nicht unter Last schalten!

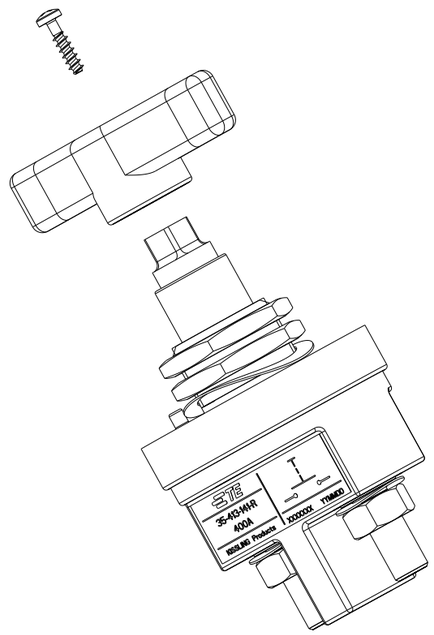


| TE ORDER-NO. | REV. | DESCRIPTION | ITEM NO |
|---|---|---|---|
| 1 K1122513 | A | BATTERY DISCONNECTOR 400A<br>Batterietrennschalter 400A | 1 |

THIS DRAWING IS A CONTROLLED DOCUMENT.

DIMENSIONS: mm

TOLERANCES UNLESS OTHERWISE SPECIFIED: DIN ISO 2768 cL

| | |
|---|---|
| 0 PLC | ± |
| 1 PLC | ± |
| 2 PLC | ± |
| 3 PLC | ± |
| 4 PLC | ± |
| ANGLES | ± |

MATERIAL

FINISH

| | | |
|---|---|---|
| DWN | N.Mielke | 19AUG2004 |
| CHK | N.Mielke | 19AUG2004 |
| APVD | N.Mielke | 20MAY2005 |

PRODUCT SPEC

APPLICATION SPEC

WEIGHT

TE Connectivity

NAME
BATTERY DISCONNECTOR 400A
Batterietrennschalter 400A

| SIZE | CAGE CODE | DRAWING NO | RESTRICTED TO |
|---|---|---|---|
| A3 | 00779 | C-35-413-141-R | - |

CUSTOMER DRAWING

| SCALE | SHEET | REV |
|---|---|---|
| | 1 OF 1 | A |

1470-19 (3/13)