EC No.

Battery Disconector 2x500A

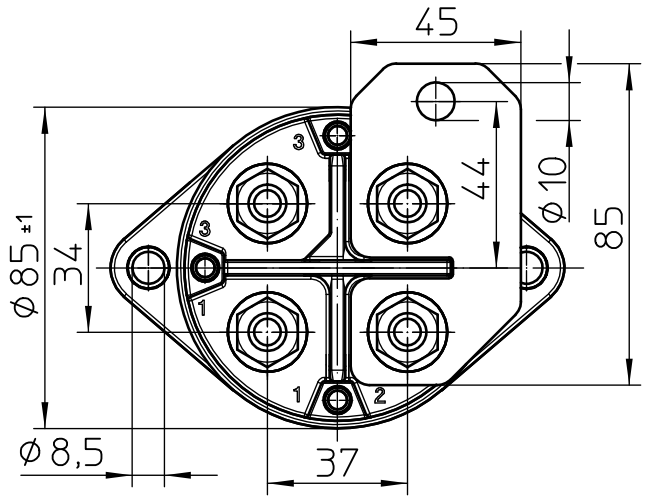

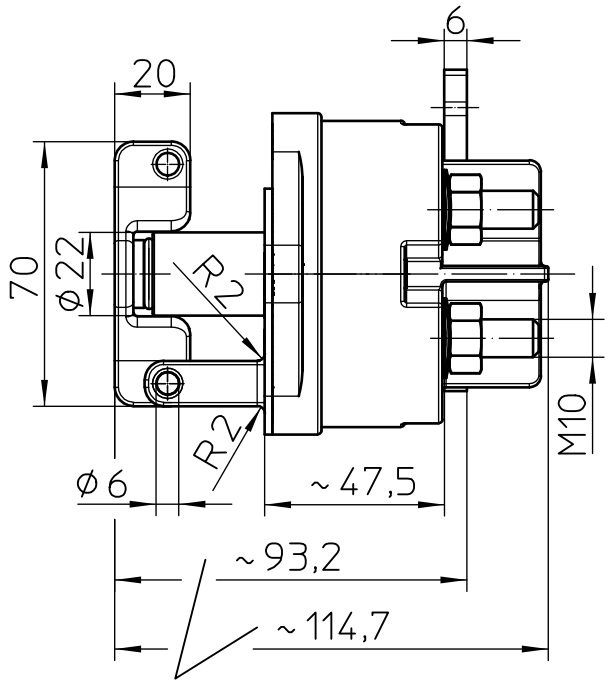

In OFF Position

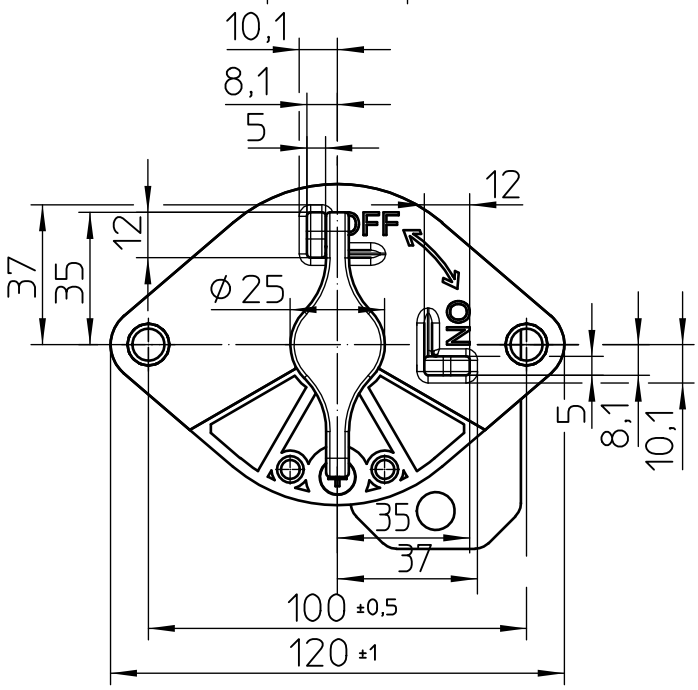

Circuit

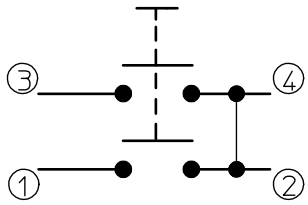

Technical Data:

Case Material:Cover:.....Vyncolit black
Base Plate:.....PA GF black
Switch Lever Material:.....PA GF black
Min. Insulation Resistance:.....100MOhm
Dielectric Withstanding Voltage:.....1050V-1min
Max. Contact Voltage Drop:.....150mV
Voltage:.....up to 32VDC
Continuous Rating:.....2x500A
Overload:.....2x2000A-1.5min
.....2x2500A-10sec
Sealing:.....IP 67/IEC 529
Vibration:.....10G 18-500Hz
Weight:.....860g / 1.9Pound
Temperature Range:.....-40°C to +85°C
Wire Section(at nominal load):.....min.250mm2
Key:.....not removeable,black
Max. Tourque (Main Contacts) 15-20Nm

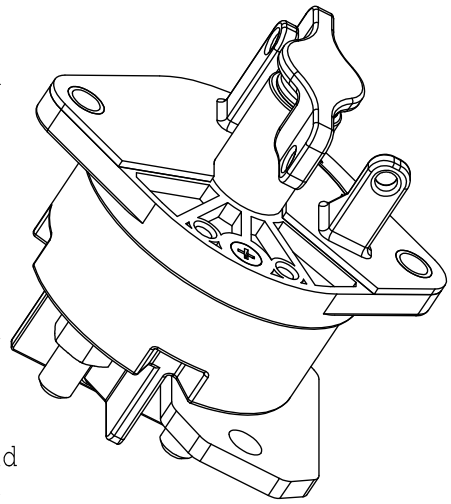

	Date	Name	mm	Scale 1:2	KÜSTING Elektrotechnik - GmbH & Co KG D - 72218 Wildberg	Drawing No: 35-555
Drawn	05.06.2003	Bicer	General Tolerances DIN ISO 2768 mK			
Check	03.09.2007	Grind				NSN.: