THIS DRAWING IS UNPUBLISHED. RELEASED FOR PUBLICATION -,- -
© COPYRIGHT - TE Connectivity ALL RIGHTS RESERVED.

REVISIONS					
P	LTR	DESCRIPTION	DATE	DWN	APVD
	C	REVISED PER ECR-21-100149	29JAN2021	PC	JS

1 MATES WITH APPROPRIATE UNIVERSAL MATE-N-LOK™ CAP OR HEADER.

2 SMALL NICKS ARE PERMITTED ON THE CIRCUIT TOWERS WHICH COULD INCREASE THE INITIAL HOUSING MATING FORCE BY UP TO 4.4 NEWTONS [1.0 LBS]. NO INDIVIDUAL NICKED TOWER SHALL INCREASE THIS FORCE BY OVER 2.2 NEWTONS [.5 LBS].

3 DIMENSIONS SHOWN REPRESENT PRODUCT IN DRY, AS MOLDED CONDITION ADDITIONAL 2% GROWTH DUE TO SUBSEQUENT MOISTURE ABSORPTION MAY OCCUR AND SHOULD BE ACCOUNTED FOR.

4 FOR RIBS EQUALLY SPACED, NO SPECIFIC ORIENTATION. NO RIBS OR SIX RIBS EQUALLY SPACED, NO SPECIFIC ORIENTATION, OPTIONAL

5 FLAMMABILITY V2 FOR THICKNESS 0.38mm, 1.5mm, qnd 3.0mm PER IEC 60695-11-10.

6 GLOW-WIRE FLAMMABILITY (GWFI) 800°C FOR THICKNESS 0.38mm AND 0.75mm PER IEC 60695-2-12.

7 GLOW-WIRE FLAMMABILITY (GWFI) 960°C FOR THICKNESS 1.5mm AND 3.0mm PER IEC 60695-2-12.

8 GLOW-WIRE IGNITION (GWIT) 825°C FOR THICKNESS 0.38mm, 0.75mm, 1.5mm AND 3.0mm PER IEC 60695-2-13.

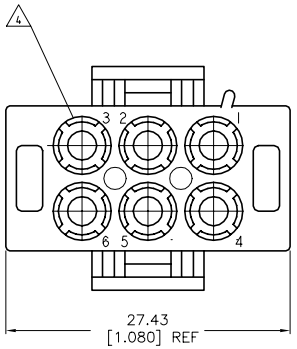

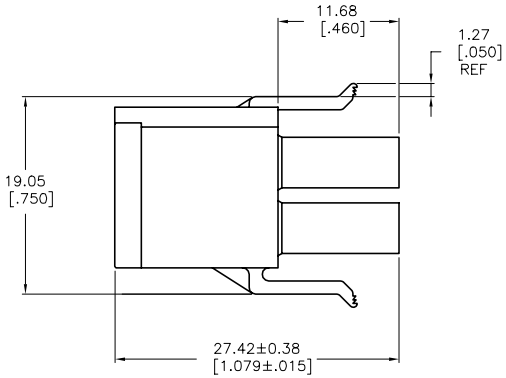

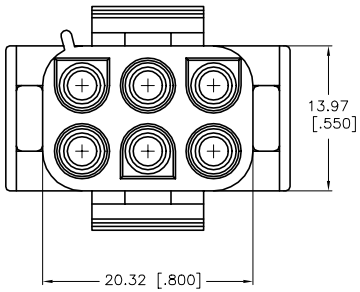

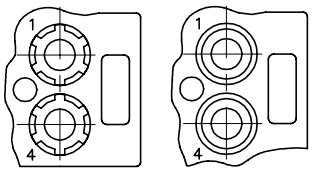

OPTIONAL CONSTRUCTION 4

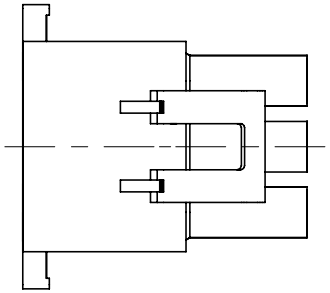

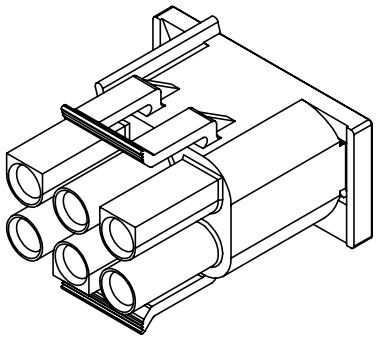

	MATERIAL	PART NUMBER
5 6 7 8	NYLON UL94V-2 GWT NATURAL	794816-2
	NYLON UL94V-0 NATURAL	794816-1

THIS DRAWING IS A CONTROLLED DOCUMENT.

DIMENSIONS: mm

TOLERANCES UNLESS OTHERWISE SPECIFIED:
0 PLC ± –
1 PLC ± –
2 PLC ± 0.13
3 PLC ± –
4 PLC ± –
ANGLES ± 0° 30'

MATERIAL: SEE TABLE

FINISH: –

DWN: K. WHITAKER 01JAN2001
CHK: S. RIDGILL 01JAN2001
APVD: S. RIDGILL 01JAN2001

PRODUCT SPEC: —

APPLICATION SPEC: —

WEIGHT: 0.000000

CUSTOMER DRAWING

TE Connectivity

NAME: PLUG, SHORT LATCH,6 CIRCUIT, UNIVERSAL MATE-N-LOK™

SIZE	CAGE CODE	DRAWING NO	RESTRICTED TO
A1	00779	C-794816	—

SCALE 4:1 SHEET 1 OF 1 REV C

4805 (1/15)