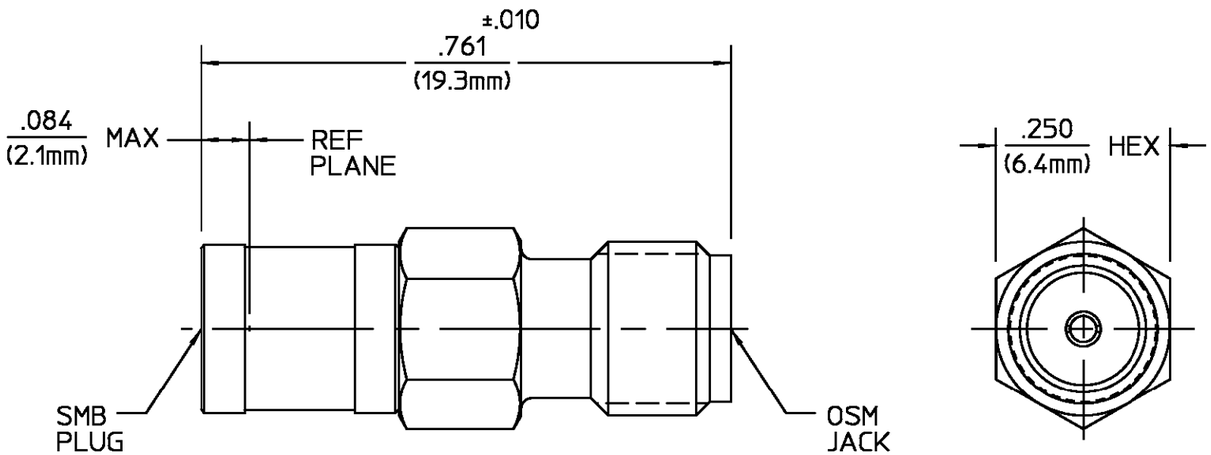


| REVISIONS | | | |
|---|---|---|---|
| REV | DESCRIPTION | DATE | APPROVED |
| A | REV/REDRAWN/ECN 17976 | 11/30/87 | RW |
| B | REV/ECN 19297 | 11/17/89 | BSH |
| $03_0$ | ECN 92-0010 | 08/13/92 | |

## ELECTRICAL

Nominal Impedance (Ohms) 50
Frequency Range (GHz) DC to 4
Volt Rating (VRMS MAX)
@ Sea Level 335
VSWR 1.10 +.016 f(GHz)
Insertion Loss (dB MAX) 0.30
RF Leakage (dB MIN) -55 @ 2-3 GHz
Corona, 70,000 Ft (VRMS MIN) 250
Dielectric Withstanding Voltage
(VRMS MIN) @ Sea Level 1,000
Contact Resistance (Milliohms MAX)
Center Contact 6.0
Outer Contact 2.0
Cable to Housing N/A
RF High Potential @ Sea Level
(VRMS MIN @ 5 MHz) 700
I.R.(Megohms MIN) 1,000

## MECHANICAL

Interface Dimensions MIL-STD-348A,
OSM Fig. 310.2
OSMB Fig. 311.2
Recommended Mating
Torque N/A
Mating Characteristics:
Insertion (MAX lbs) OSM 3.0
OSMB 2.5
Withdrawal (MIN Oz) OSM 1.0
OSMB 1.0
Force to Engage and
Disengage (in-lbs MAX) OSM 2.0
(lbs MAX) OSMB 14.0
Center Contact Captivation
Axial (Lbs) 6.0
Radial (In-Oz) N/A
Cable Retention
Axial Force (Lbs) N/A
Torque (In-Oz) N/A
Weight (Grams) TBD

## ENVIRONMENTAL

Temperature Rating -65°C to +125°C
Vibration MIL-STD-202, Method 204, Condition B
Shock MIL-STD-202, Method 213, Condition B
Thermal Shock MIL-STD-202, Method 107, Condition B, Except High Temp 85°C
Corrosion - MIL-STD-202, Method 101, Condition B, 5% salt spray

| COMPONENT | MATERIAL | FINISH |
|---|---|---|
| HOUSING SLEEVE | STAINLESS STEEL PER ASTM-A484 AND ASTM-A582, TYPE 303 | PASSIVATE PER QQ-P-35 |
| DIELECTRIC | PTFE FLUOROCARBON PER ASTM-D-1457 | N/A |
| CENTER CONTACT | BERYLLIUM COPPER PER ASTM B 196, ALLOY C17300, CONDITION H | GOLD PLATE PER MIL-G-45204 |
| RETAINING RING | BERYLLIUM COPPER PER ASTM B 194, ALLOY C17200, CONDITION H | GOLD PLATE PER MIL-G-45204 |

UNLESS OTHERWISE SPECIFIED DIMENSIONS ARE IN INCHES
TOLERANCE ON
FRAC. ± 1/64 DEC. ±.005 ANGLES ± 1°

DRAWN BY BSH DATE 11/19/87
CHECKED BY JW 11/24/87
APP'D BY RW/BC 12/2/87

AMP

*AMP Incorporated*
140 Fourth Avenue
Waltham, MA 02451-7599

These drawings and specifications are the property of AMP Incorporated and shall not be reproduced or copied or used in whole or in part as the basis for the manufacture or sale of item(s) without written permission.

USE ASS'Y PROCEDURE

NO. A.P. N/A

TITLE SMB PLUG TO OSM JACK ADAPTER

| SIZE | CODE IDENT NO. | | REV |
|---|---|---|---|
| B | 26805 | 5182-2240-00 | $03_0$ |

SCALE 5 : 1 SHEET 1 OF 1

CUSTOMER DRAWING

AMP PART # 1060498-1
SHEET 1 OF 1 REV A