THIS DRAWING IS UNPUBLISHED. RELEASED FOR PUBLICATION 20
© COPYRIGHT 20 BY - ALL RIGHTS RESERVED.

Creo Parametric 3.0
DO NOT REVISE EXCEPT BY CAD

REVISIONS

P	LTR	DESCRIPTION	DATE	DWN	APVD
	A3	OBSOLETE -4 ECO-09-005893	10AUG2009	NCL	SHA
	B	REVISED DESIGN ECO-10-001844	02FEB2010	NCL	SHA
	B1	REVISED DRAWING ECO-17-001593	14JUL2017	NCL	NMS
	B2	REVISED BY ECN-23-226383	14AUG2023	MJI	NMS

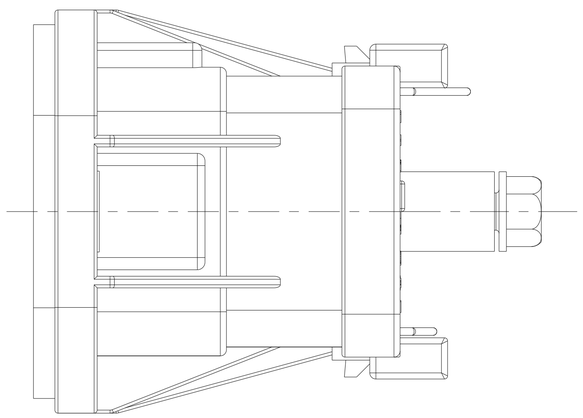

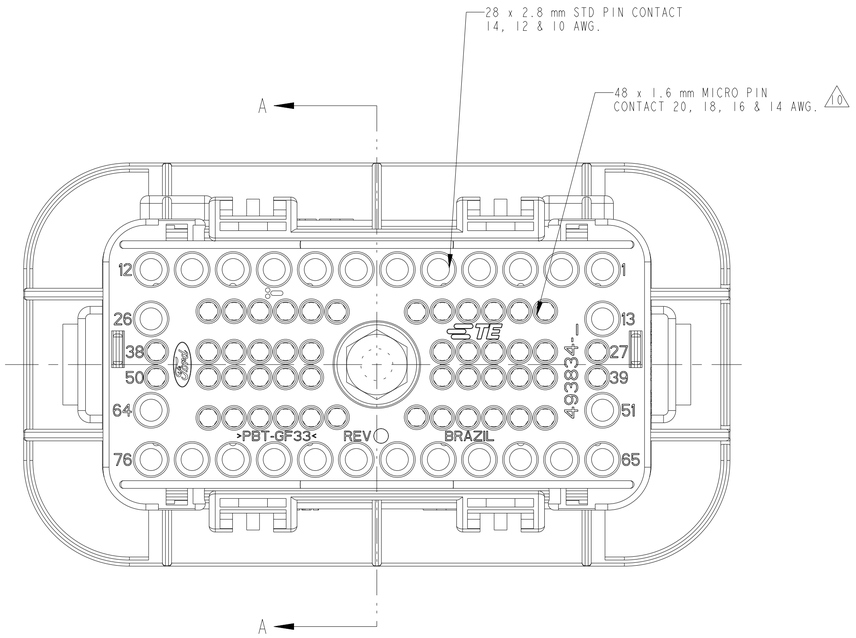

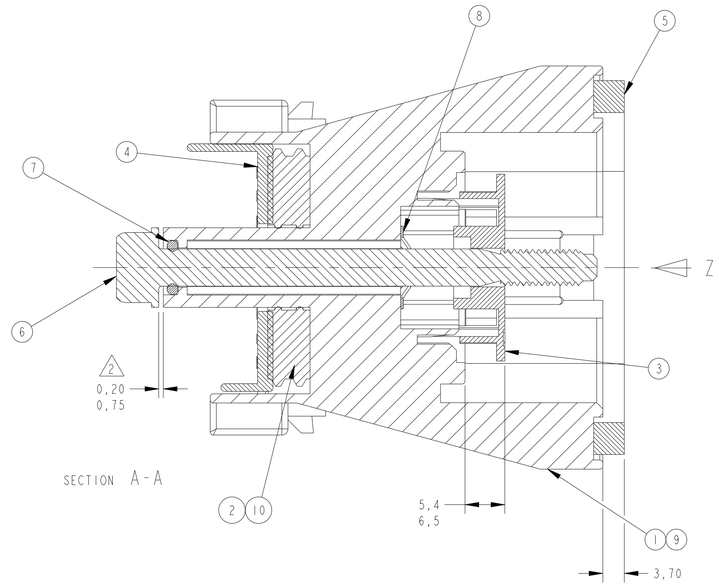

SECTION A-A

1 - PARA ASSEGURAR A COMPATIBILIDADE FUNCIONAL ENTRE AS PEÇAS,ELAS DEVEM SER FERRAMENTADAS JUNTAS E MANUFATURADAS POR UM MESMO PROVEDOR.

2 - PARAFUSO ITEM 6, DEVE GIRAR LIVREMENTE APÓS INSTALAÇÃO DA TRAVA ITEM 8.

3 - POLARIZAÇÃO "KEY A"

4 - POLARIZAÇÃO "KEY B"

5 - 1599186 (HSG ASSY 76 POSN SOCKET CONTACT) DEVE MONTAR COM 1599185 (HSG ASSY 76 POSN PIN CONTACT) APROPRIADAMENTE.

6 - A TRAVA ITEM 8 DEVE SUPORTAR 2,224 KN EMPURRANDO O PARAFUSO NO SENTIDO Z

7 - O CONECTOR DEVE SER TOTALMENTE ENCAIXADO USANDO TORQUE DE 4,8 ± 0,8 Nm NO PARAFUSO.

8 - OS CONECTORES SELADOS DEVEM ATENDER AO TESTE DE VEDAÇÃO CONFORME IEC-60529-IPX4.

9 - PARA EXTRAÇÃO DO TERMINAL UTILIZAR FERRAMENTA CONFORME TE SPEC 411-37031

10 -NAO USAR FIO DE 20 AWG ISOLAÇÃO FINA (EXCETO CABO RAYCHEM 55E 0,50mm²-DIA EXTERNO 1,21-1,31mm,PARA PN 1599185-3, CAVIDADES 1,6mm)

11 - SOMENTE PROTOTIPO

1 - TO ENSURE FUNCTIONAL COMPATIBILITY BETWEEN PARTS THEY MUST BE TOOLED TOGETHER AND MOLDED BY A SINGLE SOURCE.

2 - BOLT ITEM 6, MUST ROTATE FREELY AFTER INSTALLATION OF NUT, ITEM 8.

3 - POLARIZATION "KEY A"

4 - POLARIZATION "KEY B"

5 - 1599186 (HSG ASSY 76 POSN SOCKET CONTACT) MUST MATE PROPERLY WITH 1599185 (HSG ASSY 76 POSN PIN CONTACT).

6 - RETAINER M6,0 (ITEM 8) MUST WITHSTAND A PUSH OUT FORCE ON THE BOLT OF 2.224 KN IN THE DIRECTION OF ARROW "Z"

7 - PARTS MUST FULLY MATE USING 4.8 ± 0.8 Nm TORQUE ON BOLT.

8 - SEALED CONNECTORS SHALL ATTEND SEAL PERFORMANCE TEST ACCORDING TO IEC 60529 IPX4.

9 - FOR TERMINAL EXTRACTION TOOL SEE TE SPEC 411-37031

10 - DO NOT USE 20 AWG THIN WALL INSULATION WIRE (EXCEPT BY RAYCHEM 55E 0,50mm² CABLE OD 1,21-1,31mm, FOR PN 1599185-3, 1,6mm CAVITIES)

11 - PROTOTYPE ONLY

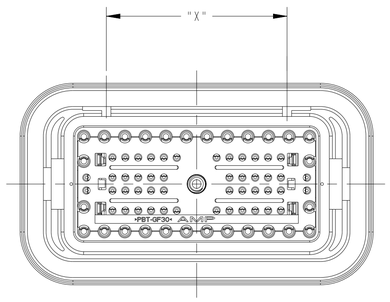

SCALE 1:1

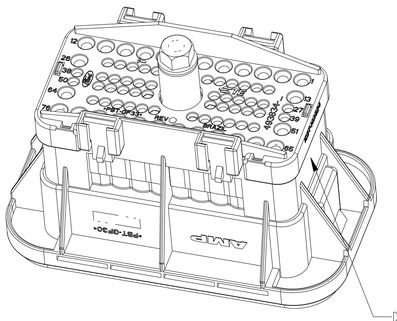

PERSPECTIVE VIEW
SCALE 1:1

DATE CODE
XXXXXXX-X / XXXXXX

I.D. NO.

COMPONENT CHANGE
SHIFT
DAY
MONTH
YEAR

4	B	71,5	1599185-2
4	B	71,5	1599185-2
4	B	71,5	1599185-2
3	A	59,00	1599185-1
	KEY	"X"	PART NUMBER
	POLARIZATION		

OBSOLETE

REQ.PER ASSY 1 N-4 -3 -2 -1 1599185	ITEM	DESCRIPTION	MATERIAL	FINISH
1 1 - -	10	GROMMET 76 POSN.	SILICONE ELASTOMER	MARROM/BROWN
1 1 1 -	9	HSG. 76 POSN. PIN CONTACT	PBT 33% GF	PRETO/BLACK
1 1 1 1	8	NUT 6 mm, STAMPED	ACO SAE 1050-1070	—
1 1 1 1	7	O´RING	SILICONE ELASTOMER	—
1 1 1 1	6	BOLT 6 mm	AÇO SAE 1015	—
1 1 1 1	5	OUTER PERIPHERAL SEAL	NEOPRENE EPDM E SBR	PRETO/BLACK
1 1 1 1	4	COVER WIRE CONNECTOR	PBT 33% GF	NATURAL
1 1 1 1	3	SPACER TPA 76 POSN. PIN CONTACT	PBT 33% GF	VERMELHO/RED
- - 1 1	2	GROMMET 76 POSN PIN CONTACT	SILICONE ELASTOMER	AZUL/BLUE
- - - 1	1	HSG. 76 POSN. PIN CONTACT	PBT 33% GF	BRANCO/WHITE

76	76	1599185-4	
76	76	1599185-3	
76	76	1599185-2	
76	76	1599185-1	
76 75 74 73 72 71 70 69 68 67 66 65 64 63 62 61 60 59 58 57 56 55 54 53 52 51 50 49 48 47 46 45 44 43 42 41 40 39 38 37 36 35 34 33 32 31 30 29 28 27 26 25 24 23 22 21 20 19 18 17 16 15 14 13 12 11 10 9 8 7 6 5 4 3 2 1	TOTAL OPEN HOLES	PART NUMBER	

THIS DRAWING IS A CONTROLLED DOCUMENT.

DIMENSIONS: mm

TOLERANCES UNLESS OTHERWISE SPECIFIED:
0 PLC ±-
1 PLC ±0,3
2 PLC ±0,20
3 PLC ±-
4 PLC ±-
ANGLES ±1°

MATERIAL: SEE TABLE -
FINISH: SEE TABLE -

DWN E.LOPES 22APR2004
CHK P.L.FARIA 22APR2004
APVD D.A.OLIVEIRA 22APR2004
PRODUCT SPEC -
APPLICATION SPEC -
WEIGHT -

TE Connectivity

NAME: HOUSING ASSEMBLY 76 POSN PIN CONTACT SEALED

SIZE A1 | CAGE CODE 00779 | DRAWING NO C-1599185 | RESTRICTED TO -

CUSTOMER DRAWING | SCALE 2:1 | SHEET 1 OF 1 | REV B2

4805 (3/13)