THIS DRAWING IS UNPUBLISHED
VERTRAULICH UNVEROEFFENTLICHTE ZEICHNUNG
© COPYRIGHT 2024 TE Connectivity Germany GmbH

RELEASED FOR PUBLICATION 2017
FREI FUER VEROEFFENTLICHUNG
ALL RIGHTS RESERVED.
ALLE RECHTE VORBEHALTEN.

MATED WITH:
PASSEND ZU: 208-18006

PROJEKT NR.:

REVISIONS
ANDERUNGEN

P	LTR	DESCRIPTION BESCHREIBUNG	DATE	DWN	APVD
	B1	E-17-015004 (added serial parts)	11OCT2017	RW	AK
	B2	E-19-016672 (removed code J and pilot parts)	25OCT2019	FF	AK
	B3	PCN-22-128957 (removed optional long latch)	17FEB2022	RW	AK
	B4	PCN-24-211274 (added China Market variants)	12JUN2024	RW	AK

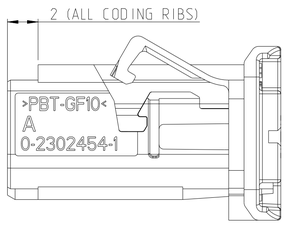

Kodierung A / CODE A

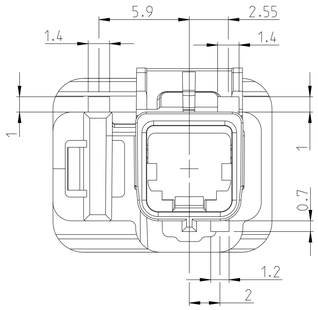

Kodierung B / CODE B

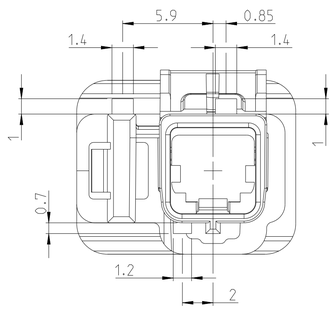

Kodierung C / CODE C

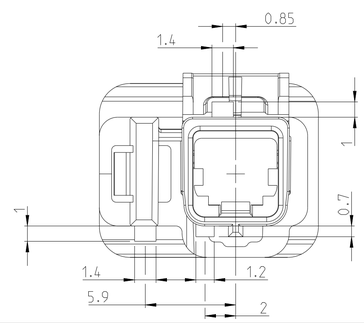

Kodierung J / CODE J

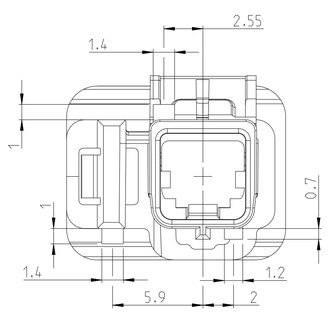

Kodierung Z / CODE Z

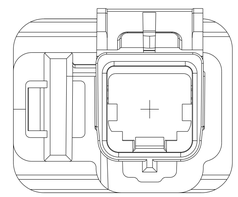

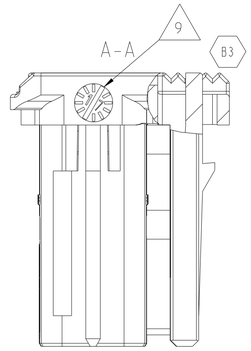

Notizen / NOTES

1 0-2302454-1 Kodierung A wie dargestellt
0-2302454-1 CODING A AS SHOWN

2 Passend zu Stiftwanne nach TE-Schnittstellenzeichnung 208-18006
MATING TO PINHEADER ACC. TE-INTERFACE DRAWING 208-18006

3 Kammer fuer MATEnet 2Pos. NanoMQS female Insert module TE PN 0-2302450-X
CAVITY FOR MATEnet 2Pos. NanoMQS FEMALE INSERT MODULE TE PN 0-2302450-X

4 Materialkenzeichnung
MATERIAL MARKING

5 TE-Logo
TE-LOGO

6 TE-Teil Nummer
TE-PART NUMBER

7 Revisionsstand
PART REVISION

8 Kontaktkammernummer
CONTACT CAVITY NUMBER

9 Produktionsdatum
PRODUKTION DATE

10 Anlieferzustand: 2. Kontaktsicherung geoeffnet
DELIVERY CONDITION: RETAINER IN OPEN POSITION

B4 11 Verpackung: Siehe Verpackungsanweisung V2302454
PACKAGING: SEE PACKAGING SPEC. V2302454

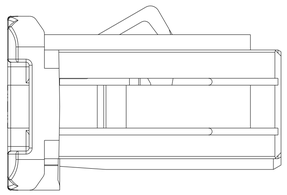

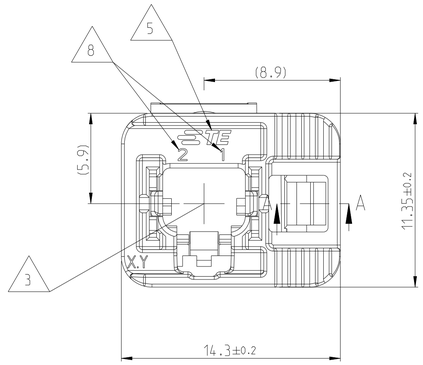

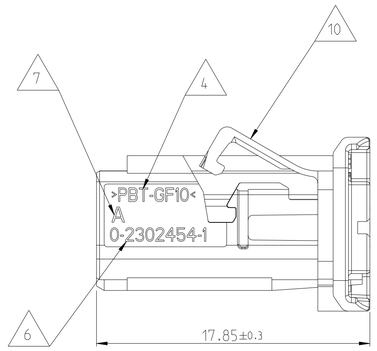

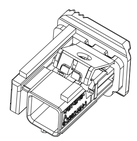

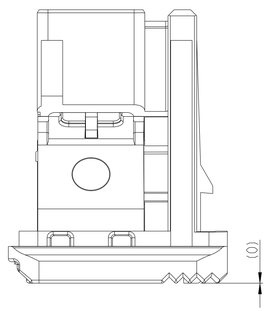

SHOWN IN END-LOCKED POSITION
Darstellung in Endraststellung

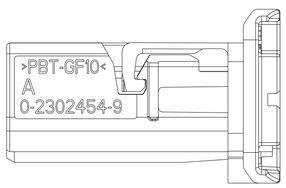

CODE	PART No.	Rev.	DESCRIPTION	MARKET	MATERIAL	WEIGHT [g]	COLOUR similar RAL
Z	2-2302454-9	A	Single-Port MATEnet Frame, Code Z	CHINA B4	PBT-GF10	0.9	water-blue 5021
J	2-2302454-7	A	Single-Port MATEnet Frame, Code J			0.9	beige 1001
C	2-2302454-3	A	Single-Port MATEnet Frame, Code C			0.9	blue 5012
B	2-2302454-2	A	Single-Port MATEnet Frame, Code B			0.9	white 9010
A	2-2302454-1	A	Single-Port MATEnet Frame, Code A			0.9	black 9011
Z	0-2302454-9	A	Single-Port MATEnet Frame, Code Z	GLOBAL	PBT-GF10	0.9	water-blue 5021
~~J~~	~~0-2302454-7~~	~~A~~	~~Single-Port MATEnet Frame, Code J~~			~~0.9~~	~~beige 1001~~
C	0-2302454-3	A	Single-Port MATEnet Frame, Code C			0.9	blue 5012
B	0-2302454-2	A	Single-Port MATEnet Frame, Code B			0.9	white 9010
A	0-2302454-1	A	Single-Port MATEnet Frame, Code A			0.9	black 9011

THIS DRAWING IS A CONTROLLED DOCUMENT.

DIMENSIONS: MASSEINHEITEN: mm

TOLERANCES UNLESS OTHERWISE SPECIFIED: ALLGEMEINTOLERANZEN
0 PLC ±0.2
1 PLC ±0.1
2 PLC ±0.1
3 PLC ±-
4 PLC ±-
ANGLES/WINKEL ±4°

MATERIAL: see table
FINISH/OBERFLACHE/FARBE: see table

DIN N7A2 - TOLERANCES AND ACCEPTANCE CONDITIONS
DIN N7A2 - Toleranzen und Abnahmebedingungen

DWN J.KIEßWETTER 16AUG2016
CHK R.WUERKER 16AUG2016
APVD A.KETTELER 29AUG2016
PRODUCT SPEC PRODUKTSPEZ. 108-94568
APPLICATION SPEC VERARBEITUNGSSPEZ. 114-94431
WEIGHT GEWICHT see table

TE Connectivity

NAME
Single-Port MATEnet Frame
SINGLE-PORT MATEnet FRAME
-

SIZE	CAGE CODE	DRAWING NO ZEICHNUNGS-NR.	RESTRICTED TO NUR FUER
A1	00779	C-2302454	-

CUSTOMER DRAWING /KUNDENZEICHNUNG | SCALE MASSSTAB 5:1 | SHEET BLATT 1 OF VON 1 | REV. B4

4805 (3/13)