PART	MATERIAL	COLOUR	PLATING
COVER	PA 66 GF25	Ultramarine Blue	
BASE	PA 66 GF25	Black	
COIL TERMINAL 1 and 2	CuSn		Sn
LOAD TERMINAL A and B	Cu		Sn

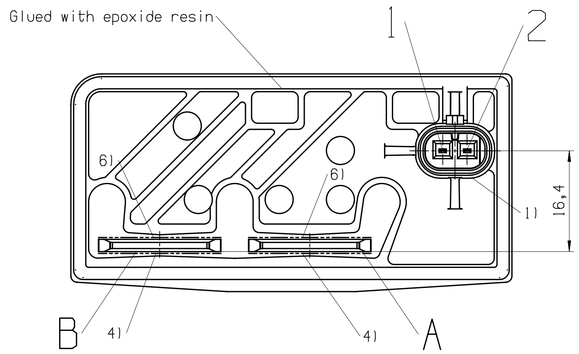

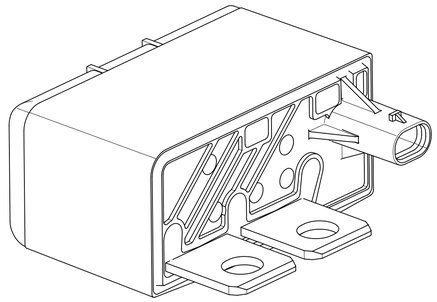

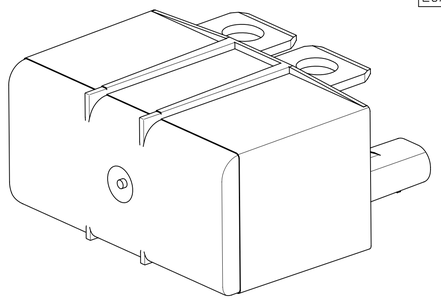

CHANGES REV. A2:
Dimensions of Seating Area in Fusebox - Note 5)
Dimension 1,3 mm changed to Reference dimension (1,3)
Dimension 1,5 mm on top of rib added

CHANGE REV. A1:
Drafting error clarification

CHANGES REV. A:
Initial Released Engineering status changed from PRELIMINARY to RELEASE.

CHANGES REV. 71:
-Seating ribs shifted about 6 mm
acc. customer request 2008-11-17 / TE answer 2008-11-20.
See change of dimension 24 to 18 in field G4
See change of dimension 24 to 18 in field G10

REVISIONS 51 up to 70 have not been distributed.

Drawing created with REV. 51
similar to V23230-D2001-X001 REV. 52_54

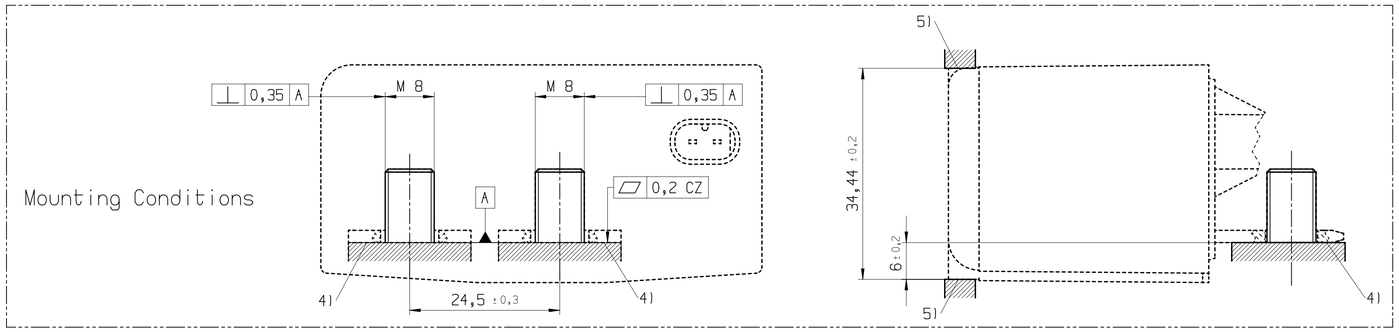

Pin Assignment

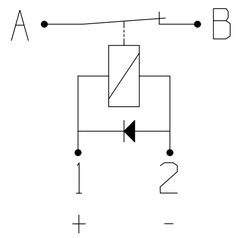

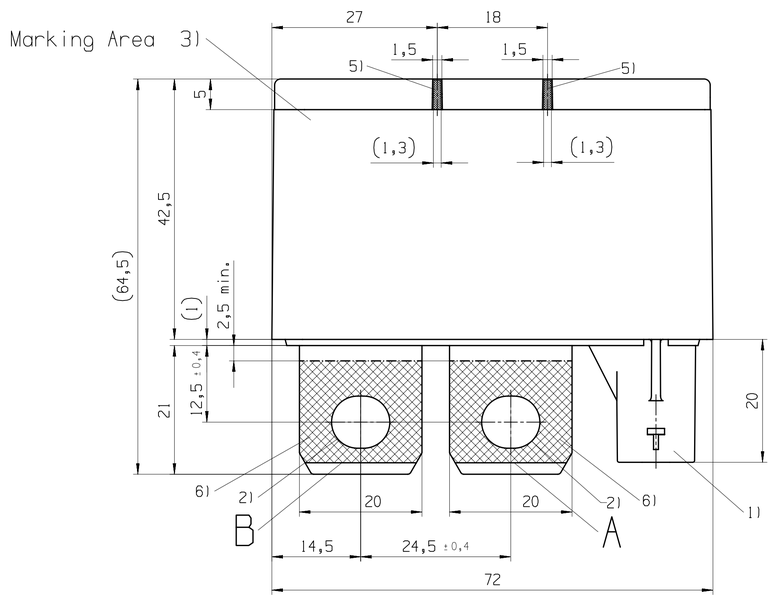

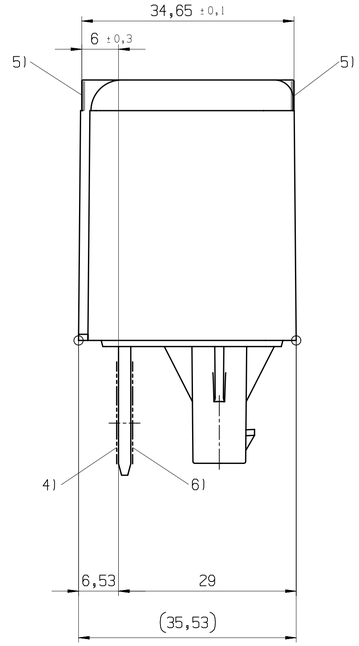

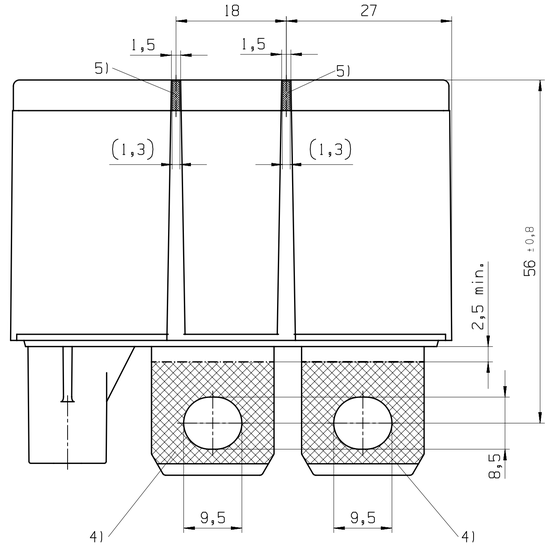

1) Connector AMP MCP1.2, 2pos. Keying B, appropriate for TE part no. 2-1670916-1

2) Permitted Torque: 16,5 Nm max.

3) Labelling with following information:
- TE-Logo and -part number
- Nominal Voltage
- Date Code (Day-Month-Year)
- Circuit Diagram

4) Seating Area on Leadframe

5) Seating Area in Fusebox: (1,3) Reference dimension
1,5 dimension measured on top of rib

6) Contact area for cable lugs, Recommended cable lug:
Tubular Cable Lug 50mm², part-no. 16225, supplier: WEITKOWITZ

(...): Auxiliary Dimension

TE PN	PART NUMBER
1-1414995-0	V23230-D2001-B200

PROPRIETARY
THE REPRODUCTION, TRANSMISSION OR USE OF THIS DOCUMENT OR IT'S CONTENTS IS NOT PERMITTED WITHOUT EXPRESSED WRITTEN AUTHORITY. OFFENDERS WILL BE LIABLE FOR ALL DAMAGES. ALL RIGHTS, INCLUDING RIGHTS CREATED BY REGISTERED PATENT(S) GRANTED FOR A UTILITY MODEL OR DESIGN, ARE RESERVED.

CHANGES TO THIS DRAWING MUST BE DONE ONLY IN CAD

PAPER SIZE: A1

APPLICABLE SPEC.:

FINISH
DIMENSIONS APPLY PLATING

TOLERANCE UNLESS SPECIFIED OTHERWISE ISO 8015, ISO2768-vL

DIMENSIONS IN MM

SCALE

WEIGHT ca. 230g

MATERIAL

	DATE	NAME
DWN.	2008-10-17	Haehnel
APP.	2008-11-25	Koetter
REV.		
LOCATION	Bln P	

PART NAME
HCR 200 N/C 12V

REV.	CHANGE ORDER	DATE	APP.
A2	ECO-19-007297	10MAY2019	AFer
A1	Clarification	06AUG2017	AFer
A	Initial Release	2010-01-08	Thoeh
71	Internal	2008-11-25	Thoeh
51	Internal	2008-10-17	

DWG NO. V23230-D2001-B200

SHT. 1 OF 1

CUSTOMER DRAWING